How to Drop Two Stories without Breaking St*ff - A Sewer Story of Energy Dissipation

Pete Stayton, P.E.

Idaho Operators Conference, Moscow ID

Pacific Northwest Clean Water Association

May 23, 2017

J·U·B ENGINEERS, INC.

Outline

- Project Background
- Alternatives Evaluation
- Project Execution

Project Background

M-Interceptor (1938)

June 7, 1938

- "major sewer project to extend the new trunk system and laterals into the east portion of Coeur d'Alene…"
- "The project would be easy to sponsor and could employ up to 300 WPA men next winter…"
- Also, "HOSS THIEF" IS CAPTURED

(Texas cowboy admits to sheriff he stole horse in Spokane last night)

Coeur d'Alene waterfront, 1940


McEuen
SS KIWANIS


1* (30) MH H1-09------ TO MH ----------
Wed Jun 01 05
12:20:01
-0011.00


CAT
GMC
Coeur d'Alene City Hall

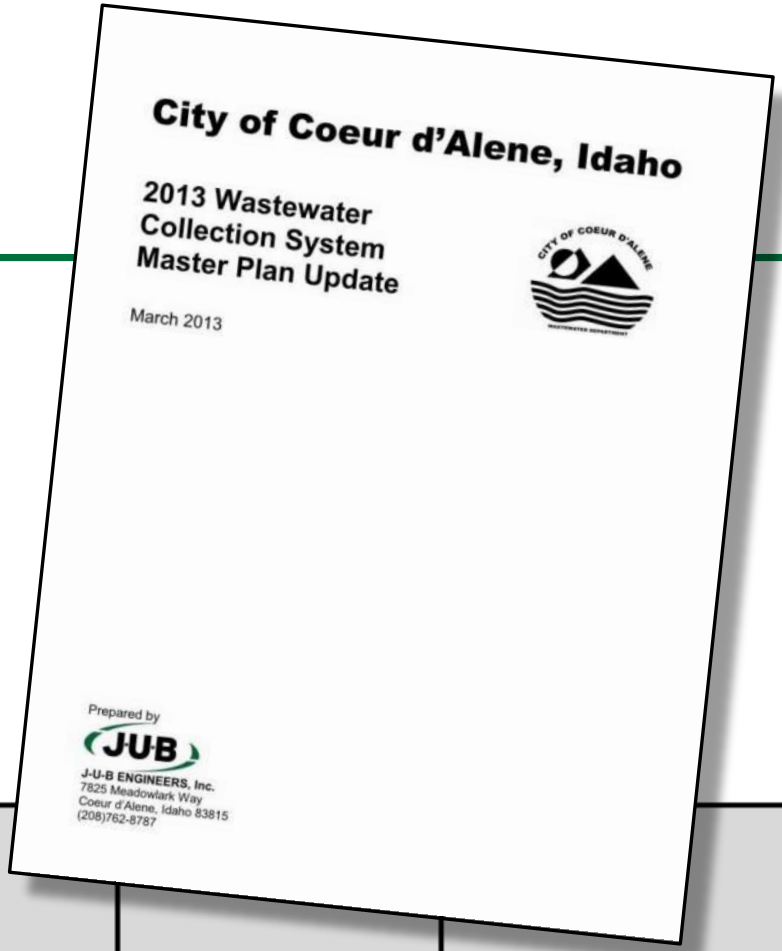

City of Coeur d'Alene, Idaho

2013 Wastewater Collection System Master Plan Update

March 2013

Prepared by

J-U-B ENGINEERS, Inc.
7825 Meadowlark Way
Coeur d'Alene, Idaho 83815
(208)762-8787

Chapter 7 – Capital Improvement Plan

ID	Project/MH ID	Recommend Action	Capital Cost [1]	Timeframe				
				Ongoing	0-5 Years	5-10 Years	10-20 Years	As needed with growth
Rehabilitation and Replacement Projects								
RR.1a	M1-09	Drop manhole replacement	$706,000		X			
RR.1b	M1-09	Drop manhole replacement (alternate approach)	$646,000		X			

J-U-B ENGINEERS, INC.

City of Coeur d'Alene

2013 Wastewater Collection System Master Plan

Figure A17

CIP Summary Map

Master Plan CIP RR.1

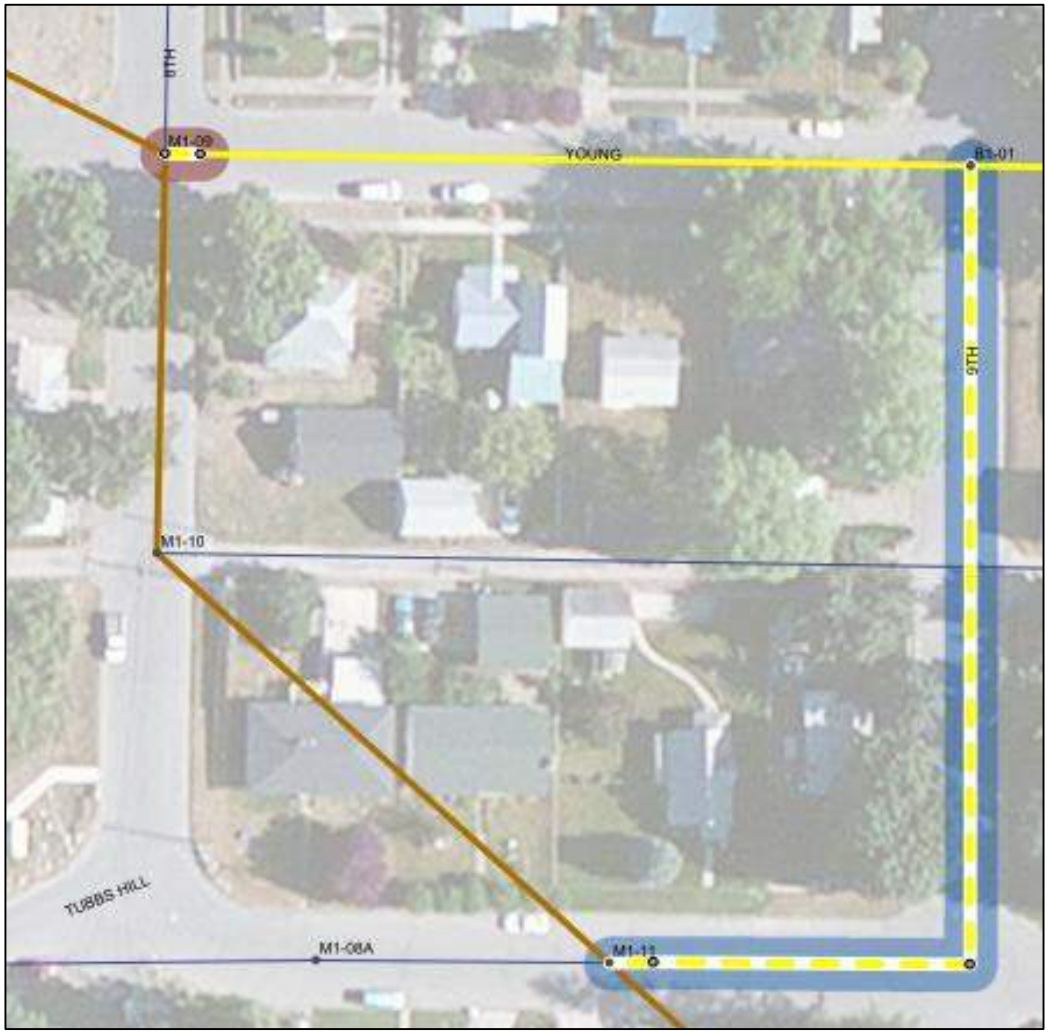

CORE ISSUE — **Poor Condition**

BACKGROUND

Manhole M1-09 is the confluence of two of the major interceptors in the system. The M Interceptor (30-inch) is approximately 30-feet deep at this manhole and the B Interceptor (24-inch) is about 13-feet deep. Flow from the B Interceptor and an 8-inch line from the north drops about 17-feet inside manhole M1-09. The condition of the manhole has deteriorated due to the harsh condition created by the large drop and resulting impact and turbulence.

Existing homes and utilities will require a small construction footprint for improvements. Two preliminary alternatives were developed for the CIP.

RECOMMENDED SOLUTION

RR.1A

> Replace M1-09 with new 96-inch manhole.

> Construct new 96-inch drop manhole east of M1-09.

> Opinion of Probable Cost (Jan 2013 Dollars) **$ 706,000**

RR.1B

Reduce excavation costs by routing the B-Interceptor to a shallower manhole.

> Re-route the B-Interceptor from B1-01 south down 9th Street and west on Pine Avenue to M1-11.

> Construct new 96-inch drop manhole east of M1-11.

> Rehabilitate MH M1-09.

> Opinion of Probable Cost (Jan 2013 Dollars) **$ 646,000**

J·U·B ENGINEERS, INC.

Energy Dissipation Alternatives

- “Controlled” Hydraulic Jump
- Vortex Flow Insert
- Vortex Drop Shaft
- Plunging Flow Drop Shaft
- Stacked Drop Manholes

Other Options
(not evaluated)

- Plunging drop (same as existing)
- Conventional internal drop shaft
- External drop (backdrop MH)
- Baffled drop shaft
- Drop shaft with turbine

Hydraulic Jump

Because of the free surface, gravity is the driving force in open channel flow. The ratio of inertial to gravity forces in open channel flow is the most important governing dimensionless parameter. It is called the *Froude number*, defined by

$D_h = \frac{A}{T}$ (top width)

$$\mathbf{F} = \frac{V}{(gD)^{1/2}} \tag{1.1}$$

$\propto$

If $F > 1$, supercrit.
$F < 1$, subcrit.

in which V is the mean velocity, D is a length scale related to depth, and g is grav-

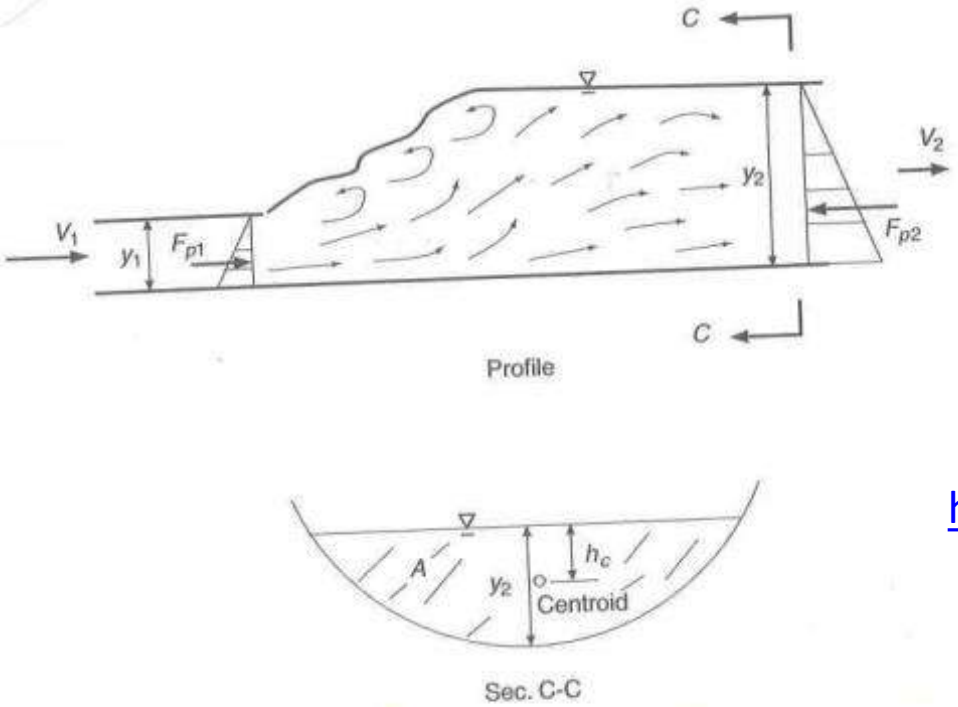

FIGURE 3.1
Application of the momentum equation to a hydraulic jump in a nonrectangular channel.

VIDEO

https://youtu.be/tGX5gIgqeYY

J-U-B ENGINEERS, INC.

Hydraulic Jump in Circular Conduit

Hydraulic jump occurs with an abrupt change in depth from supercritical to subcritical flow, creating significant energy loss. A "roller" rides continuously up the surface of the jump, entraining air and creating complex internal flow patterns. Turbulence is produced at the boundary.

Undular hydraulic jumps develop two-phase flow that significantly increases flow resistance due to the presence of air pockets, and reduces discharge capacity (Gargano, et al.)

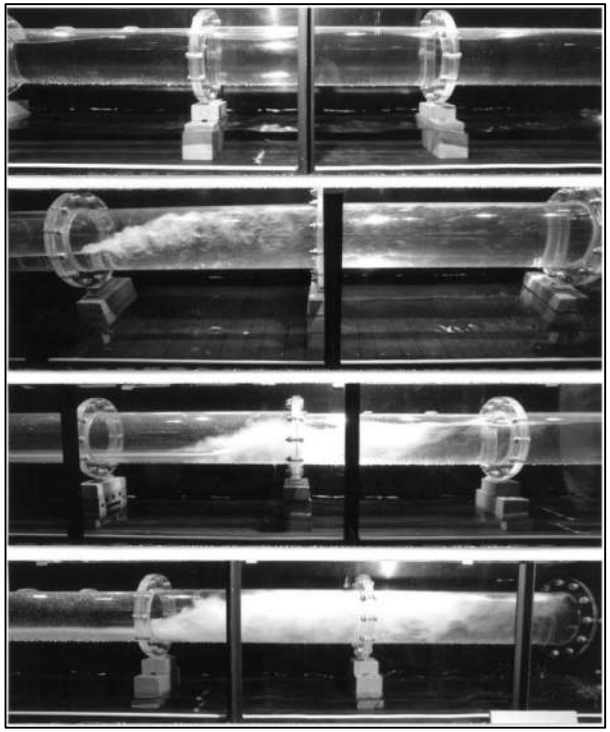

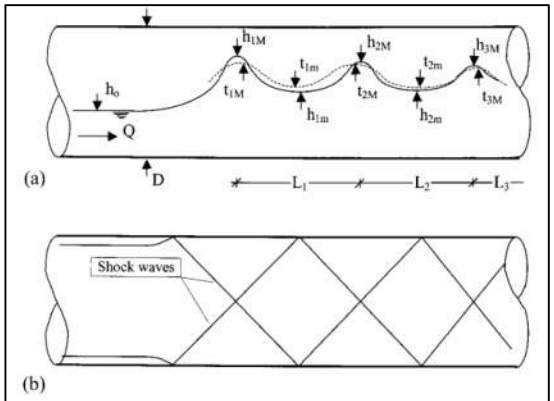

Fig. 3. Definition of undular hydraulic jump in circular conduit: (a) section and (b) plan

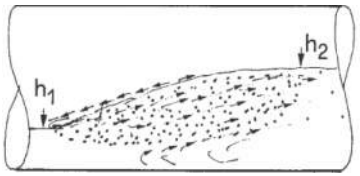

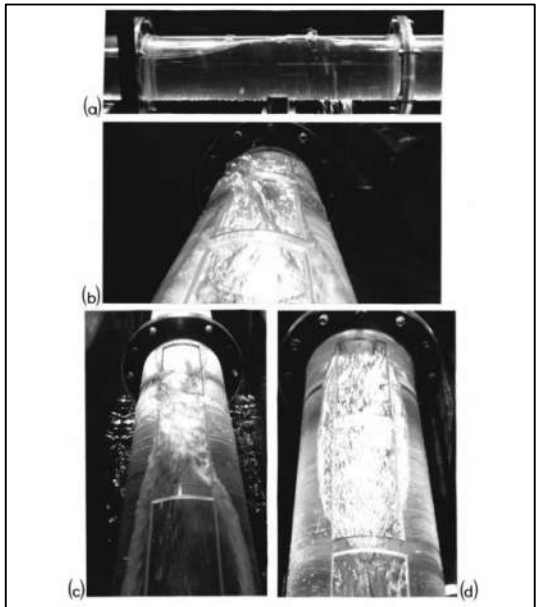

Fig. 2. Undular hydraulic jump for $y_o = 0.62$ and $F_o = 1.50$ involving choking flow

J·U·B ENGINEERS, INC.

Hydraulic Jump in Circular Conduit

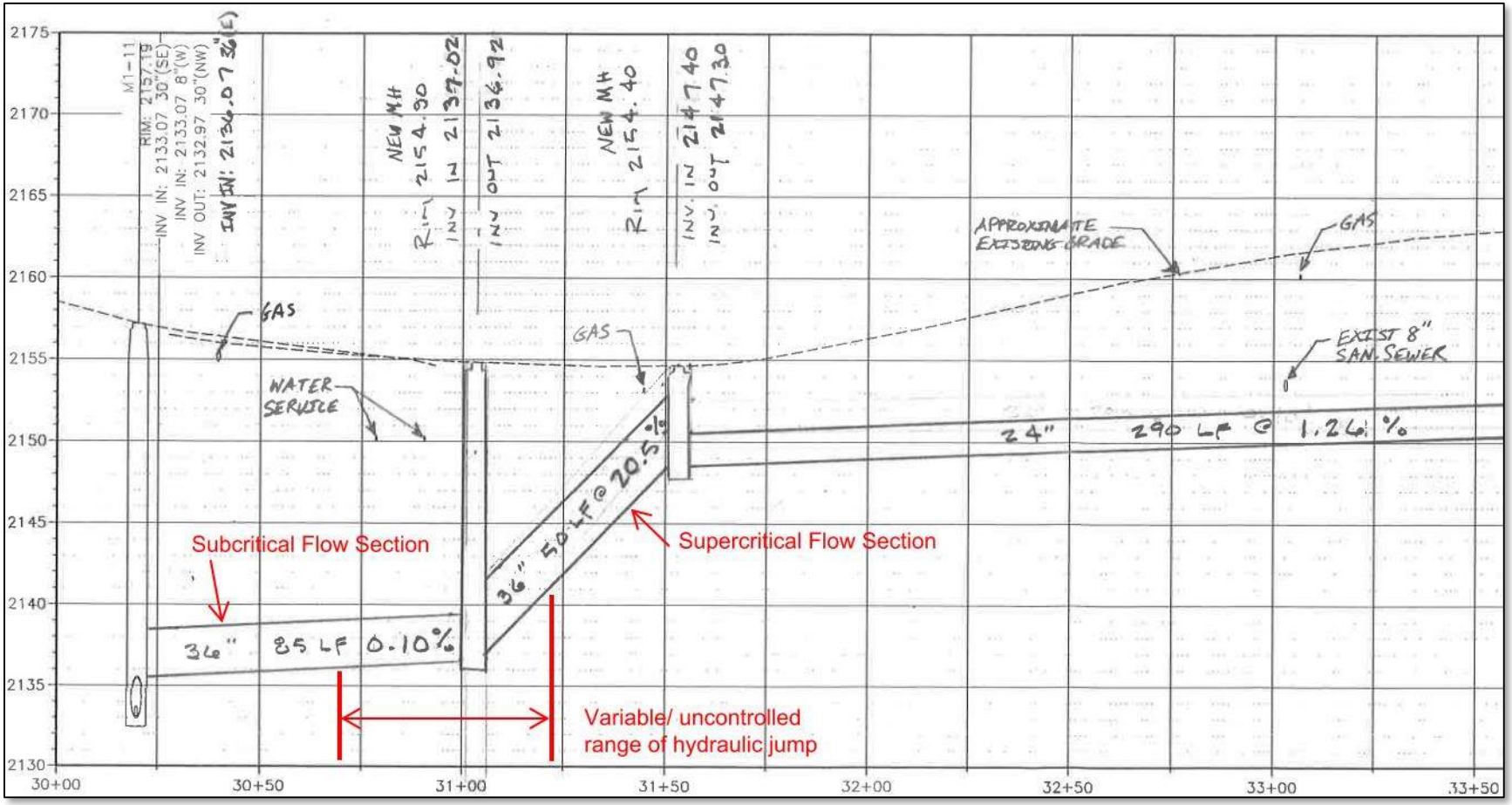

J·U·B ENGINEERS, INC.

Hydraulic Jump in Circular Conduit

Description

- Steep section of pipe with supercritical flow followed by shallow section (subcritical flow), forcing hydraulic jump to occur within the pipe or at a manhole (for free-surface)
- Vented manhole positioned upstream of supercritical pipe section to release air pockets that develop within the pipe and as a point for odor treatment

Advantages

- Energy dissipation occurs within closed conduit, eliminating the need for a drop shaft or other energy dissipating structure

Disadvantages

- Many factors influence location and type of hydraulic jump. If variables cannot be perfectly controlled, undular hydraulic jump may exist wherein the pressure at the top of pipe may drop below atmospheric, causing damage to the pipe, or produce air pockets that resist flow and reduce capacity of the pipe.
- Deep construction required to force supercritical/ subcritical flow regimes, resulting in high construction costs. May require thick wall HDPE and pipe anchors.
- May require separate odor control facilities to address sulfide gasses released from turbulent flow caused by hydraulic jump. Limited site makes odor control facilities challenging.

Vortex Flow Insert

Vortex Flow Insert

Ipex

www.ipexinc.com

"The IPEX Vortex Flow Insert (VFI) is a revolutionary technology for eliminating odorous emissions and minimizing corrosion in vertical sewer drops. With no moving parts and requiring virtually no maintenance, VFIs have delivered significant cost savings in installations across North America.

The VFI's patented spiral flow design eliminates odorous and corrosive gases in a unique way. It uses the wastewater's own flow energy to suppress the turbulence which releases noxious gases. The spiral flow creates a downdraft which traps airborne gases and forces air into the sewage flow to oxidize odorous gases. By installing a Vortex drop structure, municipalities can save thousands of dollars in monthly chemical feed, air-phase treatment and maintenance costs."

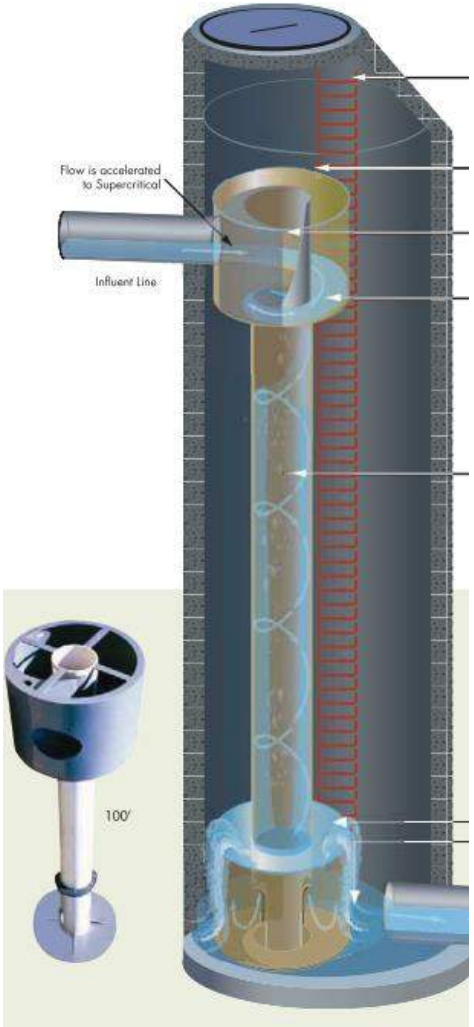

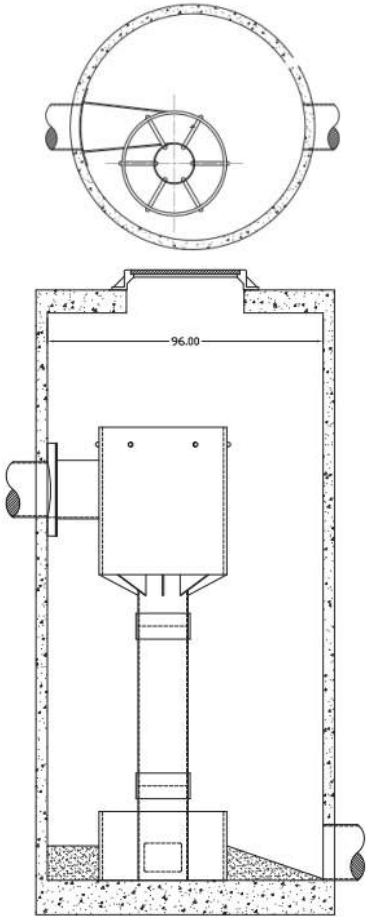

Vortex Flow Insert

Description

- Pipe constructed at typical slope and construction depth
- Prior to final discharge, flow enters a plastic device inserted into a manhole. Flow enters a vortex-inducing top section, followed by a drop shaft which draws airborne gases into a final energy dissipation pool which entrains air into the flow, reducing odorous sulfide gas emissions

Advantages

- No moving parts
- Low maintenance
- Design entrains dissolved oxygen, reducing odors and minimizing corrosion damage

Disadvantages

- Unconventional maintenance
- Lack of familiarity - no known installations in region

Vertical Drop Shaft

Vertical Drop Shaft

Hydro International

www.hydro-int.com

"The Hydro Vortex Drop™ Shaft, is a self-activating energy dissipation system with no moving parts, designed to safely drop water or sewage from virtually any height in order to prevent noise, vibration, and infrastructure damage."

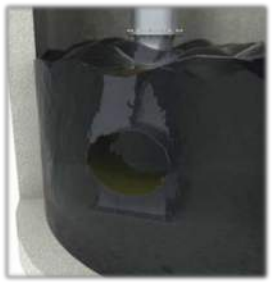

Hydro International
www.hydro-int.com

Vertical Drop Shaft

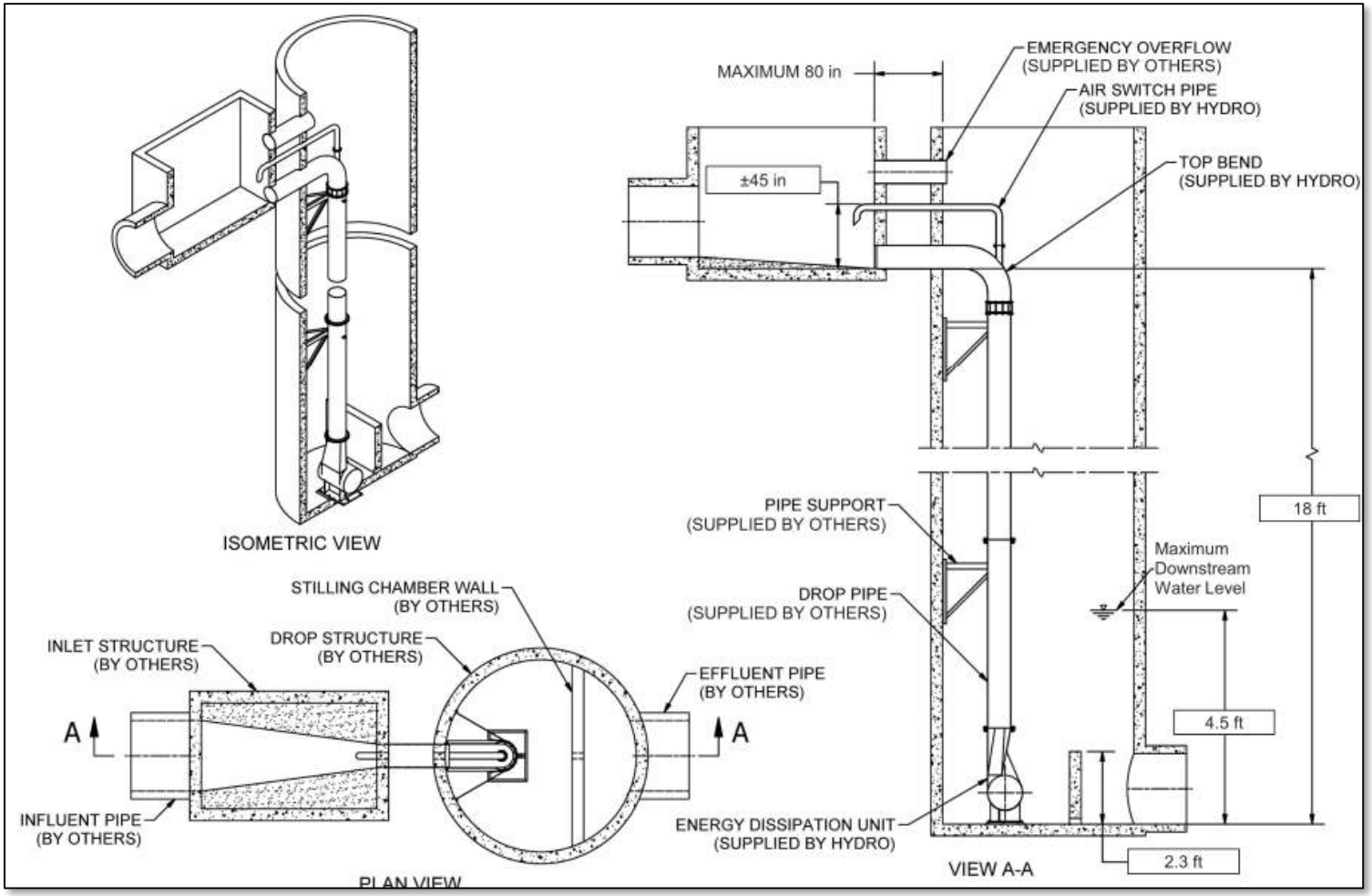

J·U·B ENGINEERS, INC.

Vortex Drop Shaft

Description

- Pipe constructed at typical slope and construction depth
- Flow enters inlet structure (shallow manhole) for horizontal flow into a stainless steel vertical drop conduit
- Vertical drop shaft of narrowing diameter dissipates energy
- Vent pipe at top of drop shaft mitigates unstable flow condition by providing smooth transition between air-entrained vortex mode and pipe full mode
- Discharge structure at bottom of drop shaft withstands impact forces, removes entrained air, and directs flow to outlet

Advantages

- Accessible for maintenance
- Compact, simple structures for cost effective installation
- High discharge capacity means smaller drop shaft diameter compared to conventional drop shafts
- No need for vortex inducing top chamber
- Energy dissipation base results in reduced outlet chamber size

Disadvantages

- Requires weir wall to create pool… potential for grit and solids accumulation requiring regular maintenance
- May need secondary bypass drop pipe in order to provide maintenance access to primary drop shaft
- Cost (drop shaft approx. $55,000 for this project – excluding installation and other materials)
- Few installations in the US. Most installations are in UK and Canada.

Plunging Flow Drop Shaft

Internal Drop Structure

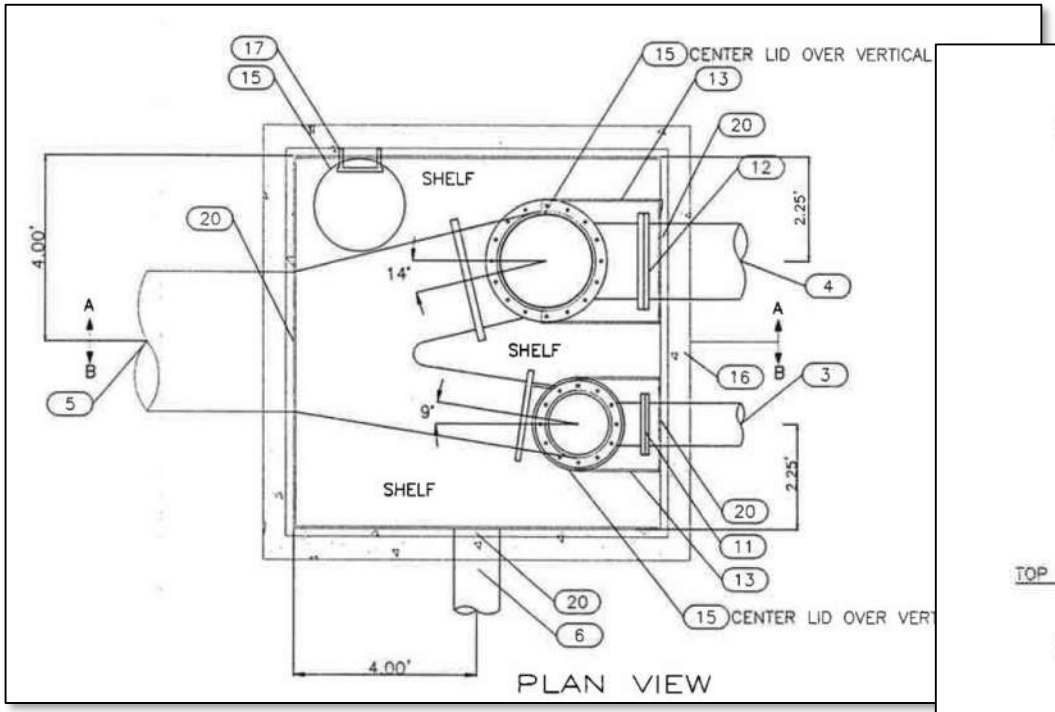

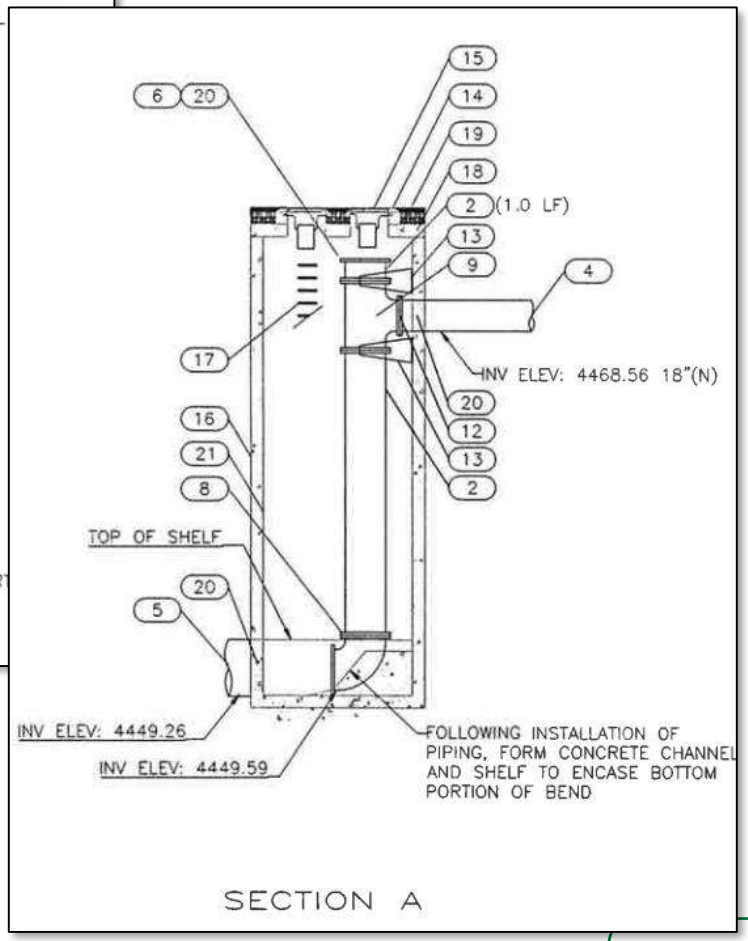

J·U·B ENGINEERS, INC.

Plunging Flow Drop Shaft

Description

- Ductile Iron pipe vertical drop shaft with elbow base for energy dissipation in existing or new manhole. Tee and capped riser on top of drop shaft for maintenance access.

Advantages

- Conventional construction and materials
- High energy loss (up to 95%)

Disadvantages

- Potential for pipe vibration, reduced capacity, and excessive pool depth if not properly aerated as flow transitions from partial pipe (free surface) to full pipe (pressurized) flow. Requires careful hydraulic design including air vent at top and rounded inlet to reduce this potential.
- Long-term erosion of base elbow
- Unsteady flow could cause blowout and loss of manhole or dropshaft covers or even “geysers” spilling to above grade
- May need secondary bypass drop pipe in order to provide maintenance access to primary drop shaft, requiring valves or gates

Stacked Drop Manholes

Stacked Drop Manholes

- Previous case studies (Edmonton, Alberta) focused on stacked drop manholes (2 at a time) for 50 m of total drop throughout a stormwater system to reduce overall pipe depth and construction costs
- Energy dissipation measured to range from 70 to 95%
- Design recommendations: 3Dx3D vault; rectangular opening w/height = D; Drop height up to 8D
    - For CdA CIP RR.1 (24” pipe), this means (2) 6’x6’ vaults with total drop height up to 16’

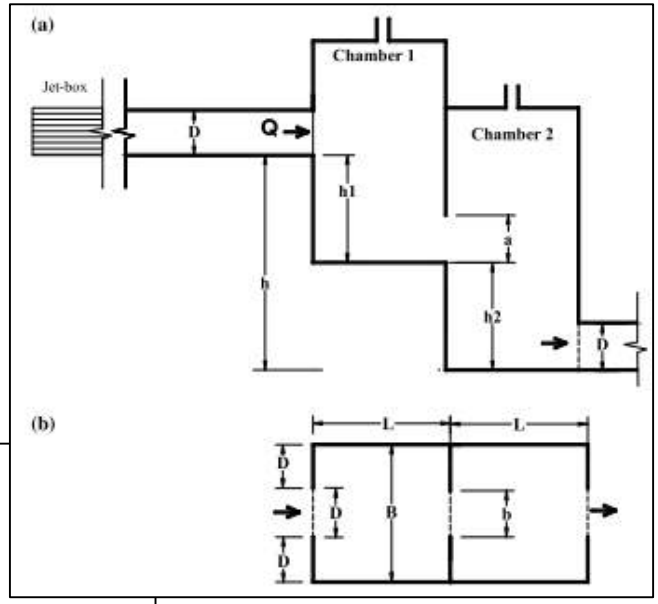

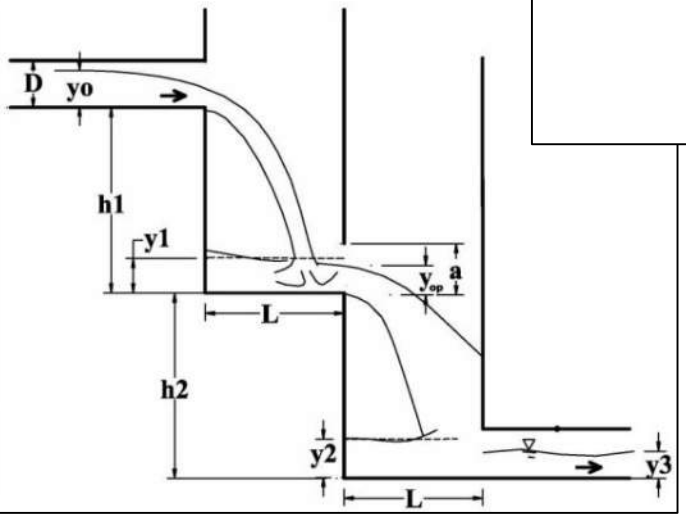

J·U·B ENGINEERS, INC.

Stacked Drop Manholes

Description

- Pipe constructed at typical slope and construction depth
- Prior to final discharge, two or more rectangular chambers stacked adjacently at staggered depths with rectangular openings

Advantages

- Shallow pipe depth provides economical construction
- Dissipates energy by 50% to 90%
- Straightforward maintenance access
- Conventional construction and materials… precast or cast-in-place manholes are low cost compared to a fabricated vortex device

Disadvantages

- Potential for long-term erosion of manhole walls… consider lining manholes for protection (adds $$$)

Key Design Elements

J·U·B ENGINEERS, INC.


STOP

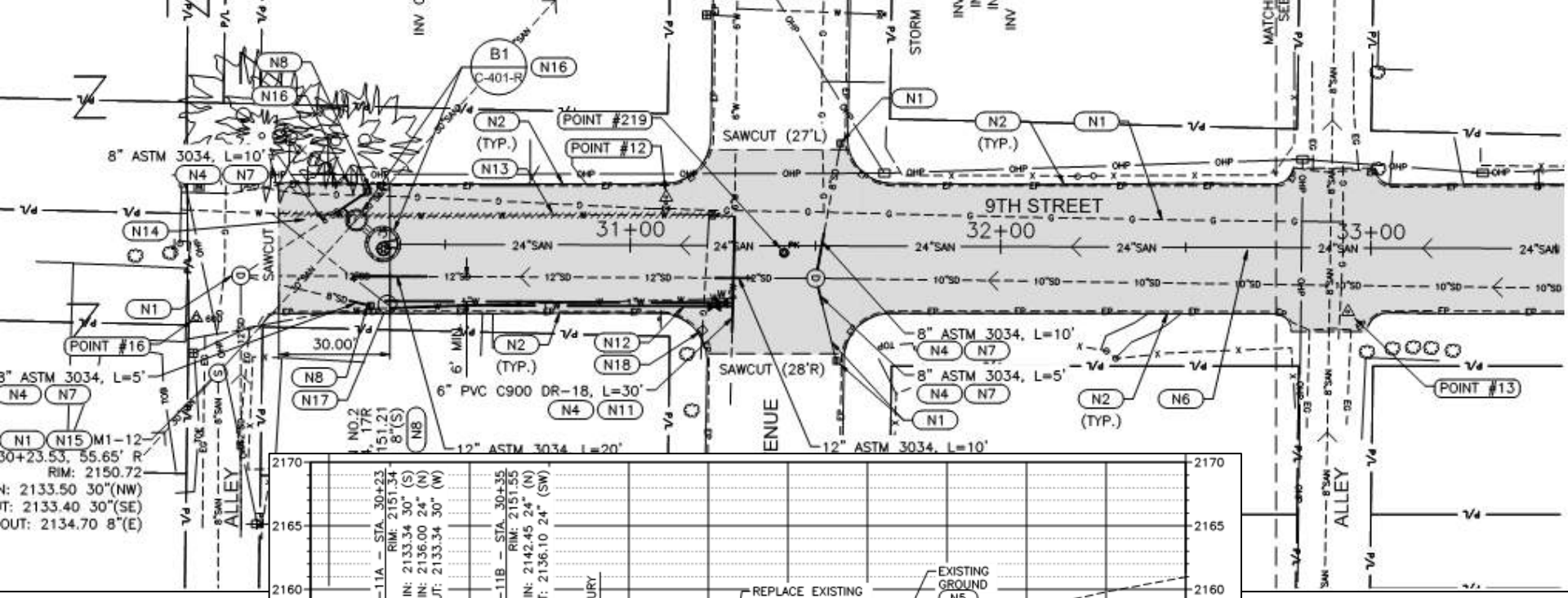

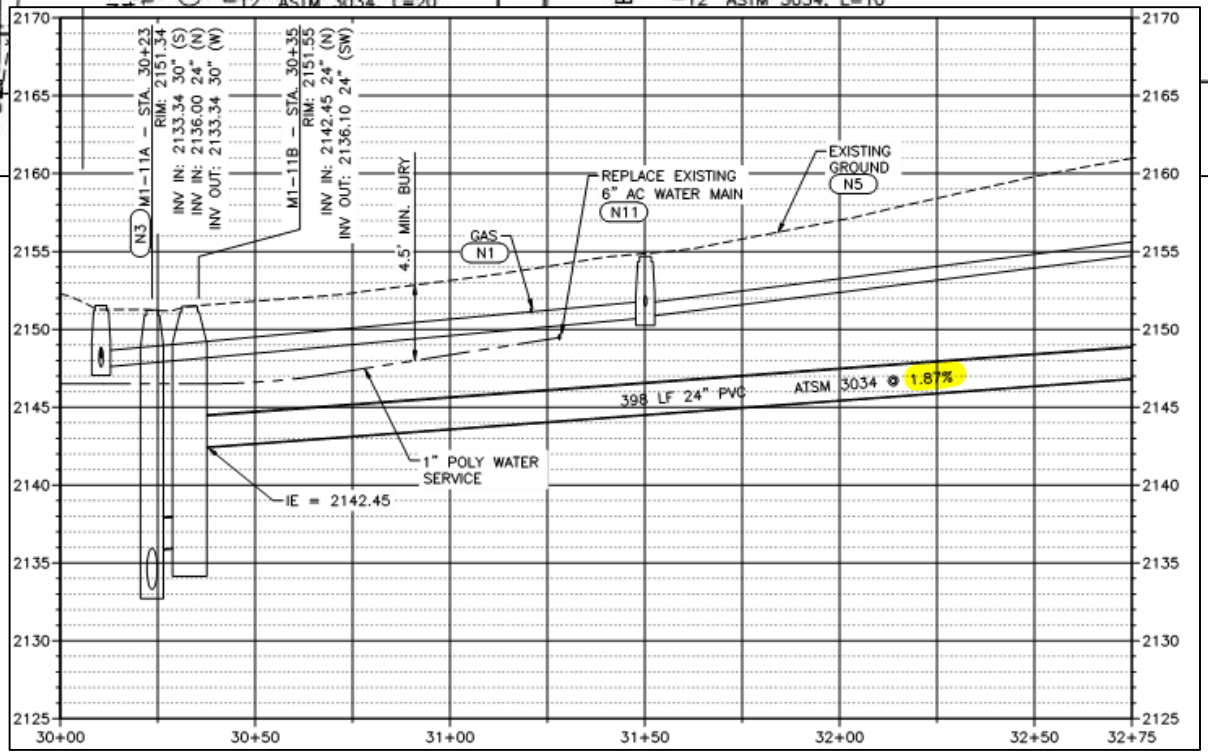

J·U·B ENGINEERS, INC.

Because of the free surface, gravity is the driving force in open channel flow. The ratio of inertial to gravity forces in open channel flow is the most important governing dimensionless parameter. It is called the *Froude number*, defined by

$D_h = \frac{A}{T}$ (top width)

$$\mathbf{F} = \frac{V}{(gD)^{1/2}} \qquad (1.1)$$

$\propto$

If $F > 1$, supercrit.
$F < 1$, subcrit.

in which V is the mean velocity, D is a length scale related to depth, and g is grav-

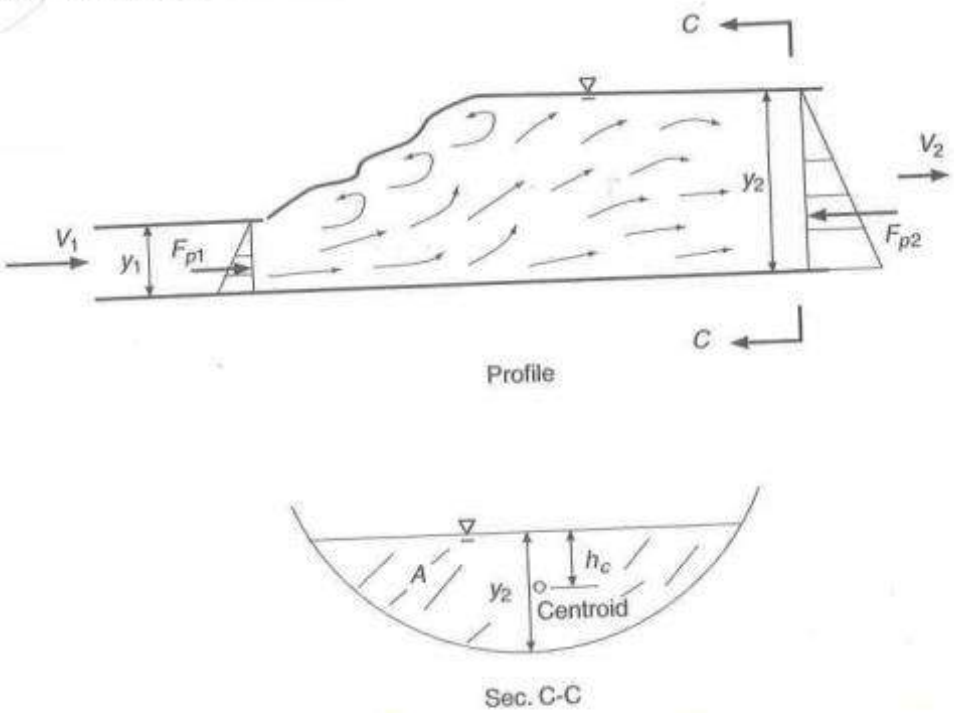

FIGURE 3.1
Application of the momentum equation to a hydraulic jump in a nonrectangular channel.

Vortex Flow Insert

Vortex Flow Insert

Ipex

www.ipexinc.com

"The IPEX Vortex Flow Insert (VFI) is a revolutionary technology for eliminating odorous emissions and minimizing corrosion in vertical sewer drops. With no moving parts and requiring virtually no maintenance, VFIs have delivered significant cost savings in installations across North America.

The VFI's patented spiral flow design eliminates odorous and corrosive gases in a unique way. It uses the wastewater's own flow energy to suppress the turbulence which releases noxious gases. The spiral flow creates a downdraft which traps airborne gases and forces air into the sewage flow to oxidize odorous gases. By installing a Vortex drop structure, municipalities can save thousands of dollars in monthly chemical feed, air-phase treatment and maintenance costs."

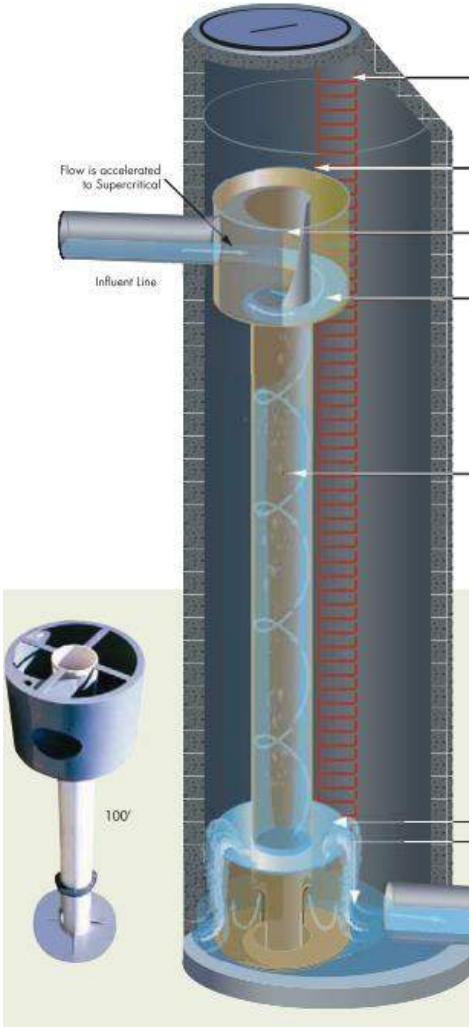

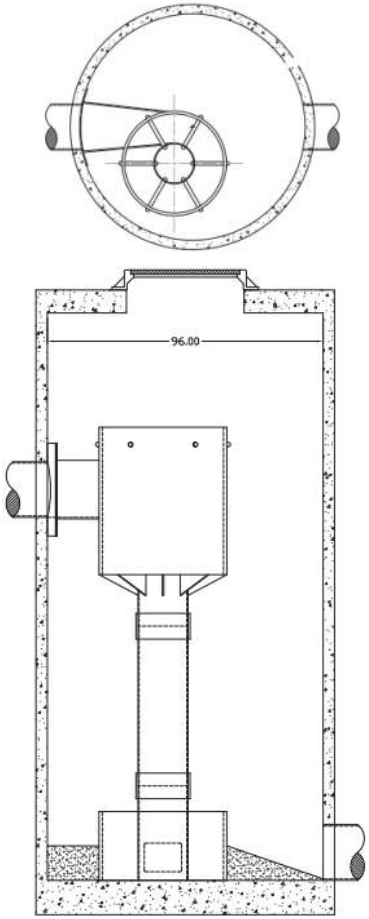

J·U·B ENGINEERS, INC.

Hydraulic Analysis

Graphical Results

Figures in below shows predicted sewage level at both flow rates.

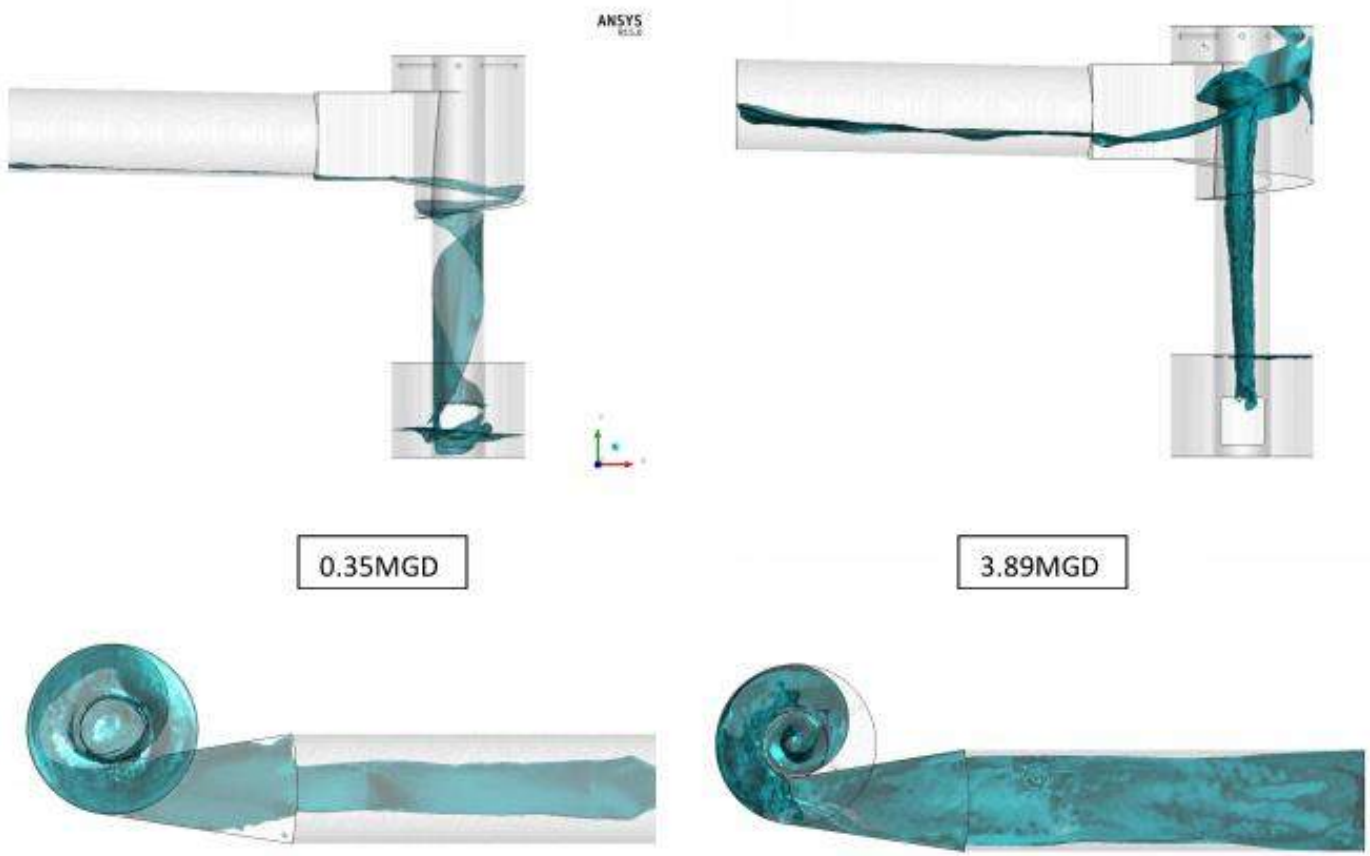

J·U·B ENGINEERS, INC.

Hydraulic Analysis

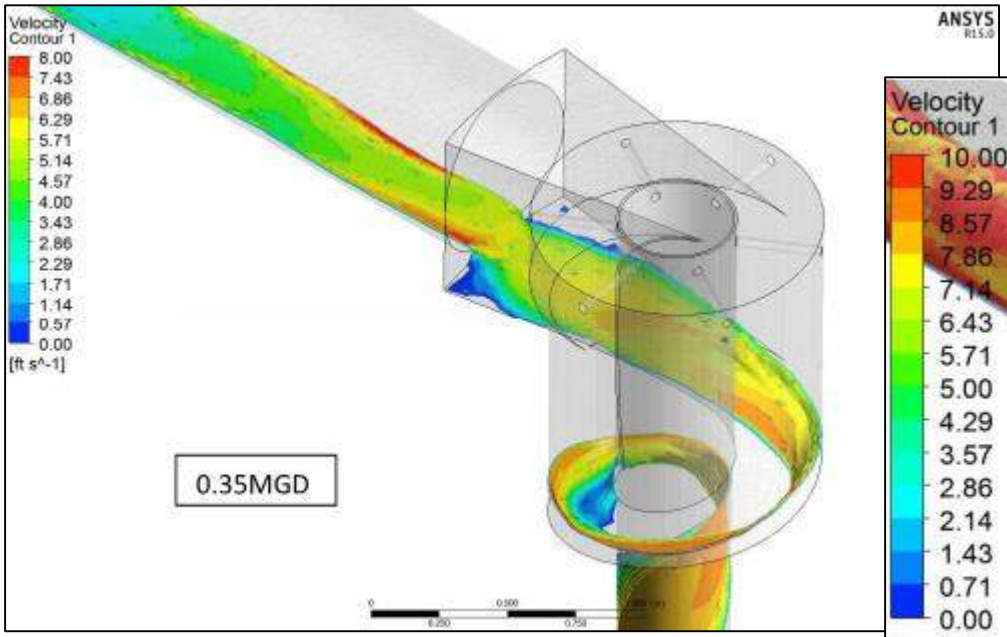

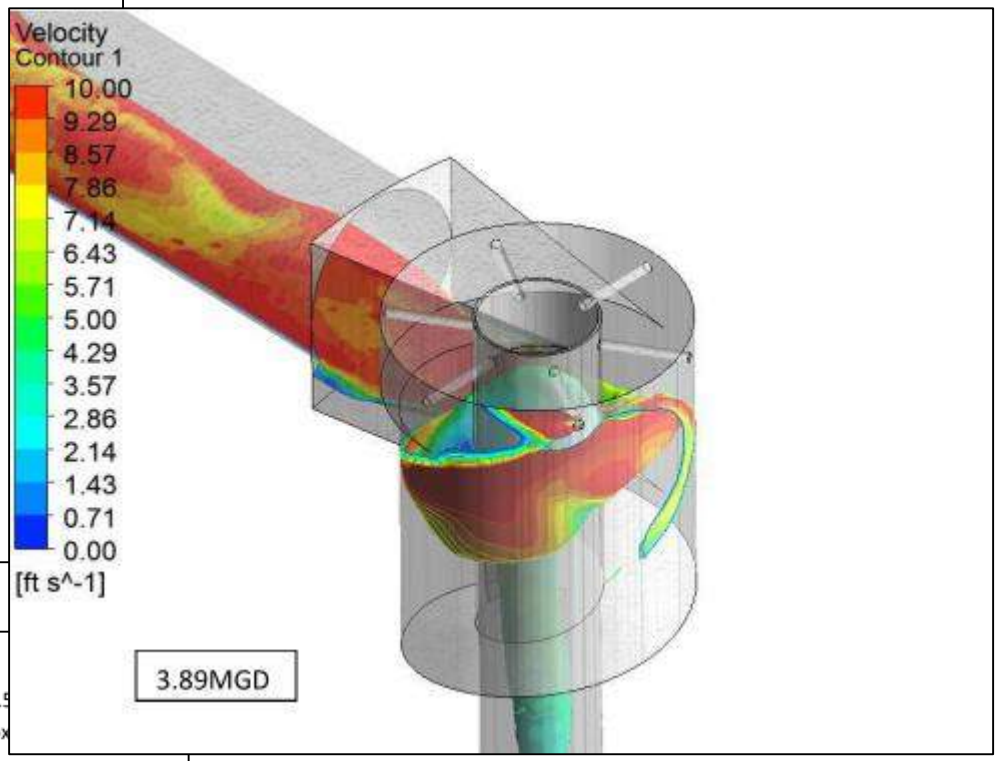

Conclusion

- Mean flow velocity at the entrance of vortex is approximately 6 ft/s at 0.35MGD and 7.5
- Once entered the vortex ramp drop, the flow starts to accelerate to a velocity of approx outskirt at 0.35MGD and over 10ft/s at 3.89MGD.
- The depth of flow in the influent pipe is approximately 2in at 0.35MGD and about 8.5in at 3.89MGD
- At 0.35MGD Froude number = $V/(gy)^{1/2}$ = 6ft/s / $(32.2ft/s^2 \times 0.17ft)^{1/2}$ = 2.56
- At 3.89MGD Froude number = $V/(gy)^{1/2}$ = 7.5ft/s / $(32.2ft/s^2 \times 0.71ft)^{1/2}$ = 1.57
- The flow is supercritical across the entire flow range since Froude number > 1 at both top and bottom ends of the flow range.

J·U·B ENGINEERS, INC.

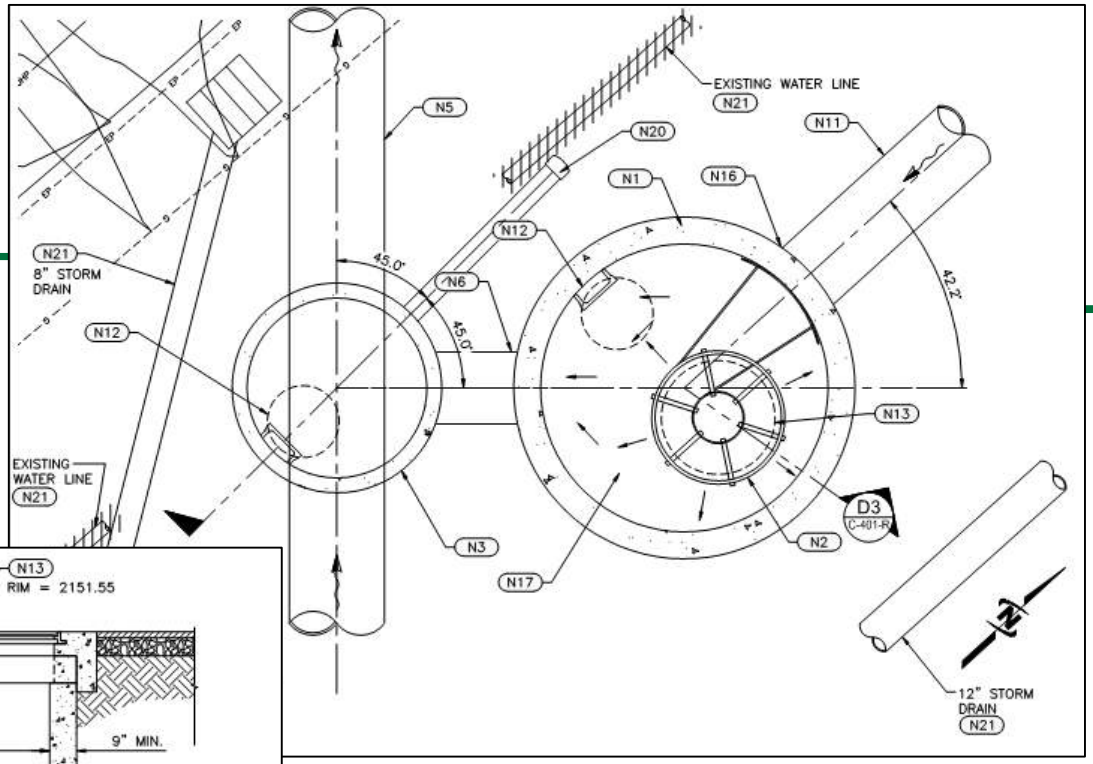

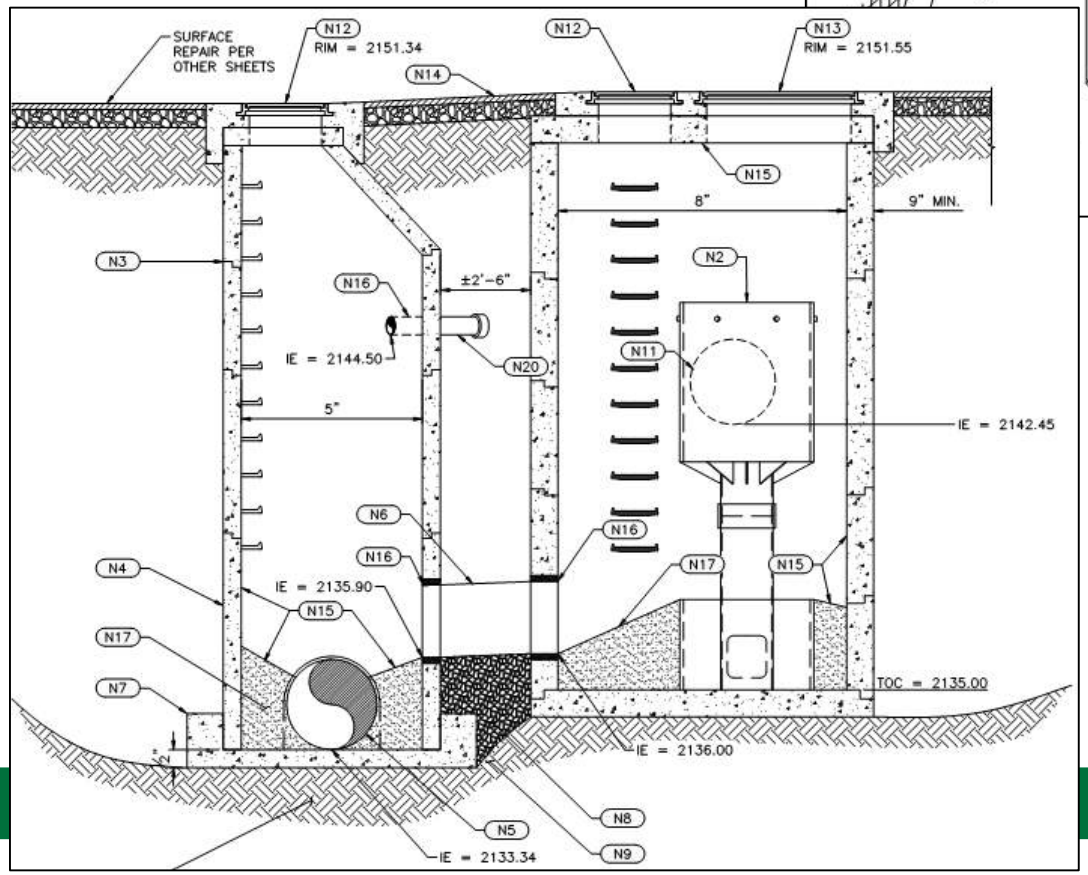

J·U·B ENGINEERS, INC.

OK TO LIFT
OK TO LIFT
OK TO LIFT
IPEX™
U.S. PATENT NO.
6,419,843
MADE IN USA

J·U·B ENGINEERS, INC.

J·U·B ENGINEERS, INC.

Bypass Structure

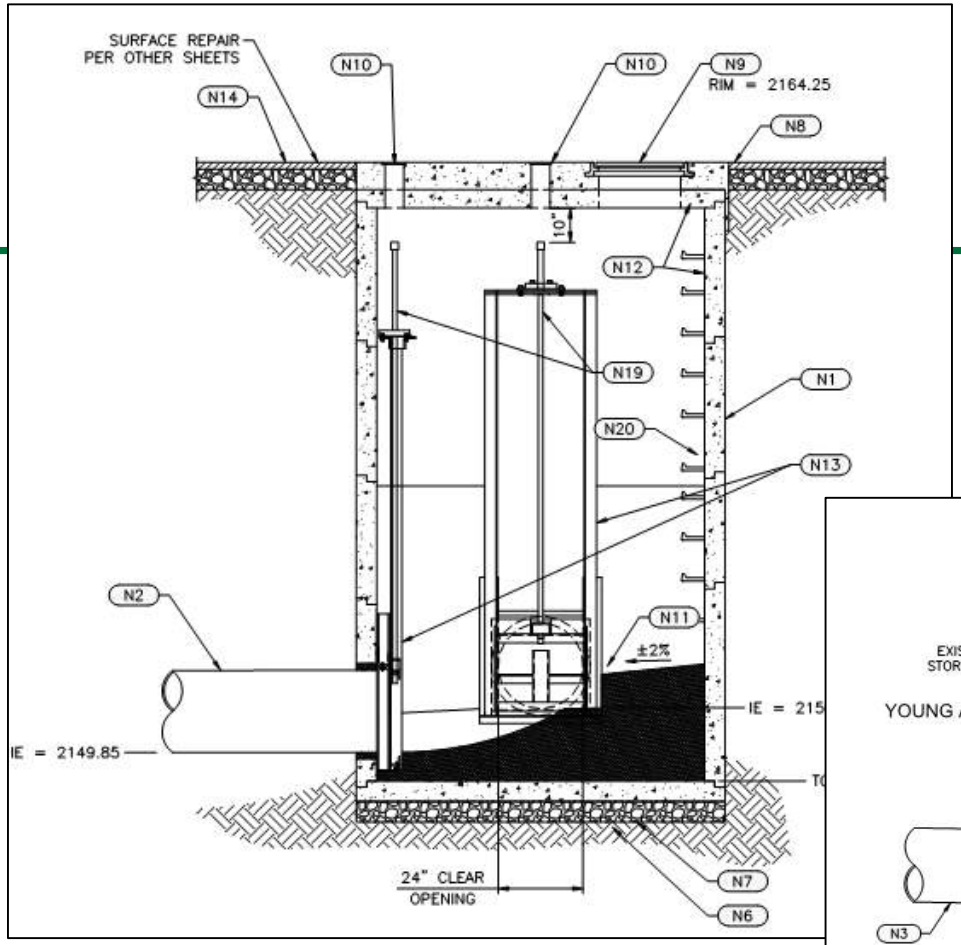

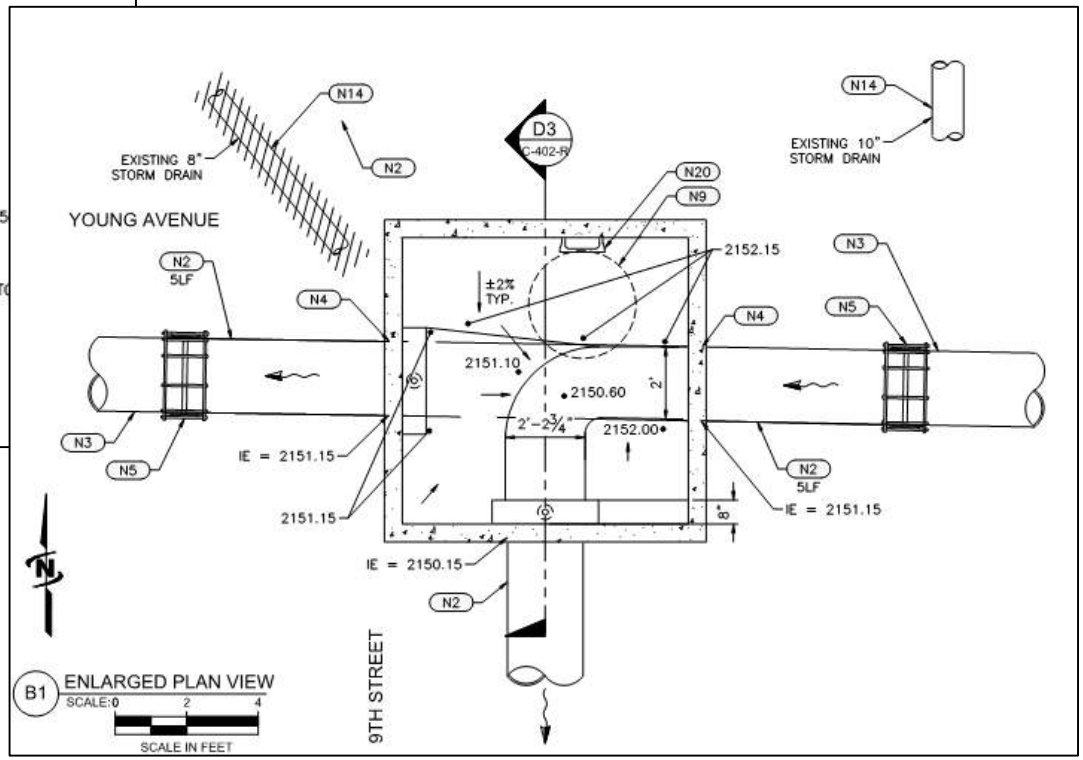

J·U·B ENGINEERS, INC.

J·U·B ENGINEERS, INC.

Manhole Rehabilitation

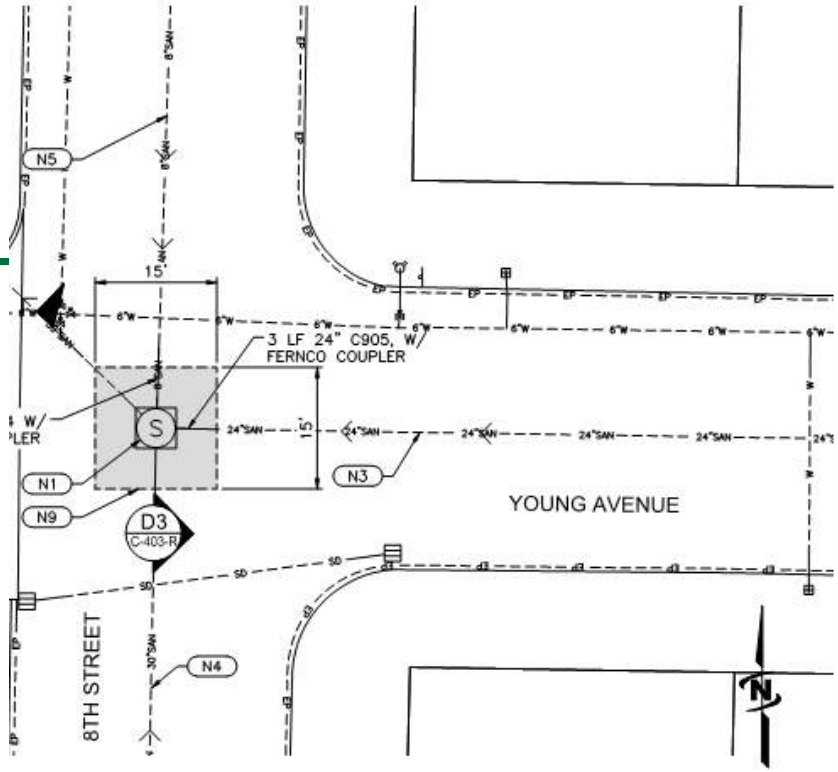

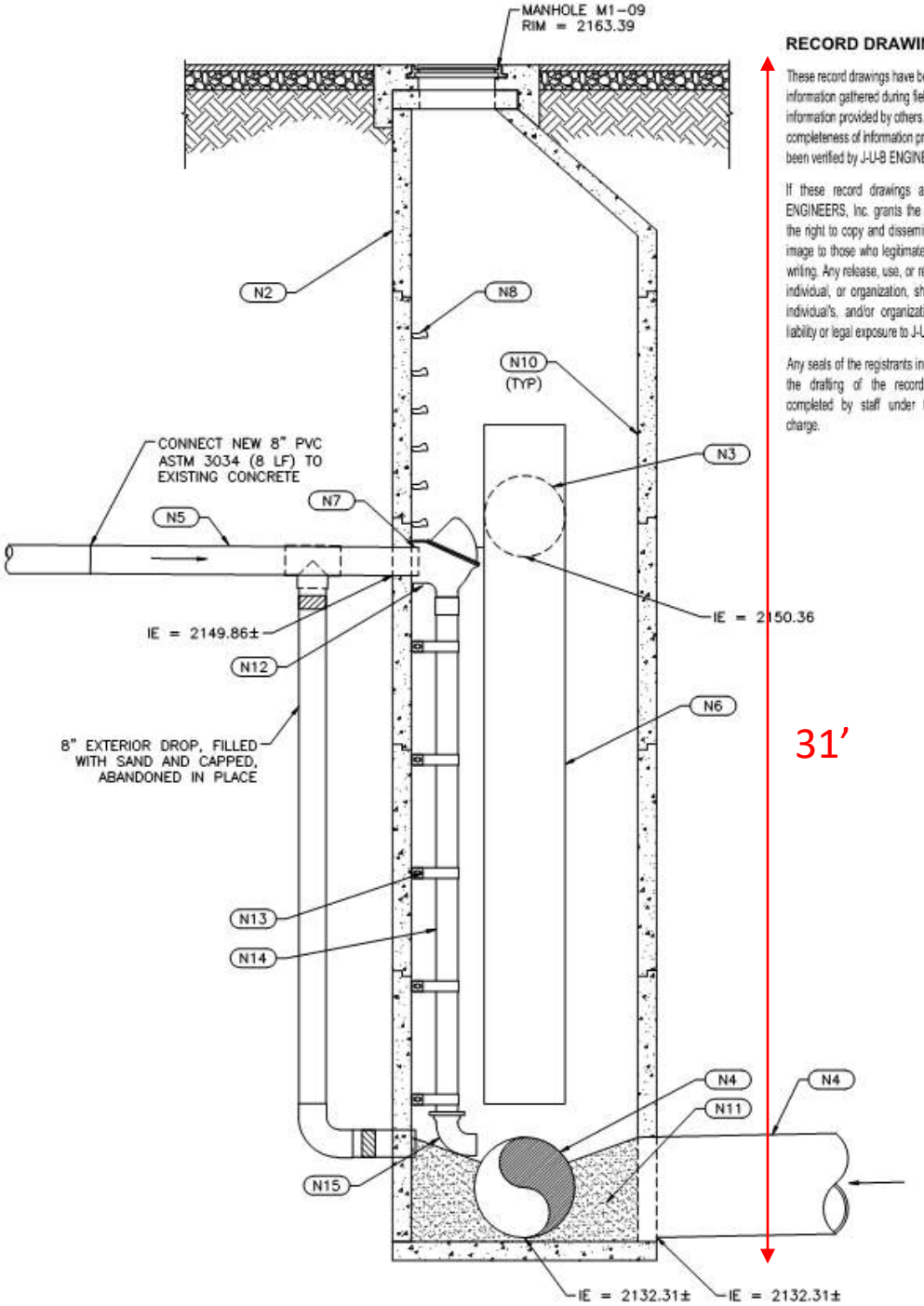

RECORD DRAWI

These record drawings have b information gathered during fie information provided by others completeness of information p been verified by J-U-B ENGINE

If these record drawings a ENGINEERS, Inc. grants the the right to copy and dissemi image to those who legitimate writing. Any release, use, or re individual, or organization, sh individual's, and/or organizat liability or legal exposure to J-U

Any seals of the registrants in the drafting of the record completed by staff under charge.

	COATING THICKNESS SCHEDULE		
	DEPTH FROM RIM	COATING THICKNESS (MDFT)	EXPECTED CONDITION TIER (REF. SP-09950)
ITIVE ALTERNATE NO. 1			
DURING MANHOLE INSPECTION AND REHABILITATION	0	750	2
	2	650	2
CONE AND RISERS; SALVAGE EXISTING FRAME AND RISERS AND SALVAGED FRAME AND COVER WITH	4	600	2
	6	550	2
	8	500	2
	10	550	2
	12	600	2
OP PIPE WITH TEE	14	600	2
RON PIPE WITHIN MANHOLE; CUT PIPE SO THAT 2-INCH	16	650	2
	18	700	2
OLE RUNGS PRIOR TO APPLYING COATING	20	750	2
Y; ASPHALT SURFACE REPAIR ON THIS SHEET IS O. 1 BID ITEMS.	22	750	2
LUDING MANHOLE BOTTOM, CHANNEL, AND SHELF; DFT) SCHEDULE, THIS SHEET; TERMINATE COATINGS INTO FACTURER'S RECOMMENDATIONS; REFERENCE SECTION	24	800	4
	26	850	4
	28	900	4
HANNEL AND SHELF ARE NOT KNOWN, BUT ASSUMED TO CH CONCRETE DEPTH IN CHANNEL INVERT); AFTER FLOW ND VIDEO EXISTING CONDITIONS AND SUBMIT TO YING REHABILITATION COATINGS, CONTRACTOR SHALL NEL; NEW CHANNEL SHALL MATCH EXISTING PIPE INVERT RINGLINE OF EXISTING 30" OPENINGS	30	950	4
	31	950	4
TH HOOD (BY RELINER / DRUAN INC., LYME CT, LL PER MANUFACTURER'S RECOMMENDATIONS AFTER	CHANNEL AND BASE	950	4

J·U·B ENGINEERS, INC.

J·U·B ENGINEERS, INC.

GENERAL NOTES

1	SEE SHEET G-002 FOR ADDITIONAL NOTES
2	THE AERIAL IMAGE USED IN THIS FIGURE IS OUTDATED; CONTRACTOR SHALL CONDUCT SITE VISITS AS NECESSARY TO BE FAMILIAR WITH ACTUAL SITE CONDITIONS AND SHALL REFLECT THESE CONDITIONS ON THE FINAL BYPASS PUMPING PLAN

KEYED NOTES

N1	(RECORD NOTE: THIS PYPASS PLAN WAS NOT USED FOR CONSTRUCTION) SUGGESTED BYPASS PUMPING ALIGNMENT (FOR BYPASSING MANHOLE M1-09); PEAK FLOW = 7.68 MGD; NOTE THIS BYPASS PUMPING ALIGNMENT IS PROVIDED FOR CONTRACTOR'S EXAMPLE ONLY; CONTRACTOR SHALL PROVIDE A COMPLETE BYPASS PUMPING PLAN WITH PROPOSED ALIGNMENT; REFERENCE SECTION SP-02547 FOR ADDITIONAL REQUIREMENTS.
N2	APPROXIMATE HIGH POINT IN BYPASS PUMPING ALIGNMENT, EL = 2165.00
N3	APPROXIMATE TOTAL HORIZONTAL DISTANCE OF BYPASS PUMPING ALIGNMENT SHOWN HEREIN = 1,250-FT
N4	CONTRACTOR TO MAINTAIN ACCESS FOR THROUGH TRAFFIC ACROSS BYPASS DISCHARGE PIPING AT STREET INTERSECTIONS
N5	30-INCH DIAMETER M-INTERCEPTOR; PEAK FLOW = 4.43 MGD
N6	24-INCH DIAMETER B-INTERCEPTOR; PEAK FLOW = 3.25 MGD
N7	MANHOLE M1-09: MANHOLE TO BE BYPASSED FOR REHABILITATION; REFERENCE DRAWING C-403.
N8	MANHOLE M1-12: BYPASS PUMPING SUCTION MANHOLE; RIM = 2150.72; INV = 2133.45, DEPTH = 17.3-FT; CONTRACTOR SHALL PROVIDE NOISE MITIGATION PROVISIONS PER SPECIFICATIONS; REMOVE MANHOLE CONE, RISERS, AND LID TO PROVIDE ACCESS FOR SUCTION PIPING; REPLACE CONE, RISERS AND LID PER SS-1 AND SS-5; WORK IS INCIDENTAL TO BYPASS PUMPING
N9	MANHOLE M1-08: BYPASS PUMPING DISCHARGE MANHOLE; RIM = 2138.84; INV = 2131.77; DEPTH = 7.1-FT; CONTRACTOR SHALL PROVIDE ODOR MITIGATION FACILITIES TO PREVENT THE RELEASE OF SEWER GASES
N10	MANHOLE M1-14: RIM = 2140.50; INV = 2134.66; DEPTH = 5.9-FT; CONTRACTOR TO PROVIDE CONTINUOUS WATER DEPTH MONITORING IN MANHOLE DURING BYPASS PUMPING OPERATION TO PREVENT SURCHARGE CONDITION
N11	AREA OF RESIDENTIAL IMPACT; CONTRACTOR TO PROVIDE NOTICE (ONE WEEK, 48 AND 24 HOURS) TO ALL RESIDENTS PRIOR TO IMPLEMENTING TRAFFIC CONTROL PLAN FOR BYPASS PUMPING OPERATION; AS A MINIMUM, NOTICE SHALL INCLUDE GENERAL PROJECT INFORMATION AND THE NATURE OF IMPACT, VICINITY MAP IDENTIFYING SPECIAL ACCESS POINTS (E.G. RAMPS OVER BYPASS DISCHARGE PIPING AT STREET INTERSECTIONS), PROJECT CONTACT INFORMATION, AND ANY OTHER SPECIAL INSTRUCTIONS, SUBMIT FOR REVIEW AND APPROVAL BY ENGINEER AND CITY.
N12	LOCATE BYPASS DISCHARGE PIPING ON NORTH SIDE OF PEDESTRIAN PATH; PROVIDE TEMPORARY PEDESTRIAN ACCESS OVER OR AROUND BYPASS FACILITIES, INCLUDING ALL NECESSARY SIGNAGE, SUBJECT TO ENGINEER AND CITY APPROVAL.

RECORD DRAWINGS:

These record drawings have been prepared based on information gathered during field observations as well as information provided by others. The accuracy or completeness of information provided by others has not been verified by J-U-B ENGINEERS, Inc.

If these record drawings are a public record, J-U-B ENGINEERS, Inc. grants the public entity with jurisdiction the right to copy and disseminate the hard copy or digital image to those who legitimately request the information in writing. Any release, use, or reuse by the public entity, any individual, or organization, shall be at the public entity's, individual's, and/or organization's sole risk and without liability or legal exposure to J-U-B ENGINEERS, Inc.

Any seals of the registrants included hereon represent that the drafting of the record drawing information was completed by staff under the registrants' responsible charge.

J-U-B ENGINEERS, INC.
J-U-B ENGINEERS, INC.
7825 Meadowlark Way
Coeur d'Alene, ID 83815
Phone: 208.762.8787
Fax: 208.762.9797
www.jub.com

RECORD
ORIGINAL SIGNED BY: PETER M. STAYTON
DATE ORIGINAL SIGNED: 07/11/16
DRAWINGS

REVISION			
NO.	DESCRIPTION	BY	DATE
1	RECORD DRAWINGS	PMS	07/11/16

CITY OF COEUR D'ALENE WASTEWATER UTILITY
B-INTERCEPTOR PROJECT

GENERAL
AREA LOCATION MAP
MANHOLE M1-09 BYPASS PUMPING ALIGNMENT

FILE	20-14-011 WA1_G-002
J-U-B PROJ. #	20-14-011
DRAWN BY:	DFQ
DESIGN BY:	JFW
CHECKED BY:	PMS
ONE INCH	AT FULL SIZE, IF NOT ONE INCH, SCALE ACCORDINGLY
LAST UPDATED:	7/11/2016

SHEET NUMBER:
G-004-R

J-U-B ENGINEERS, INC.


godwin
godwin pumps
godwin
godwin


PARK
CLOSED
11:00pm
to
5:00am